E65/PLCD7T

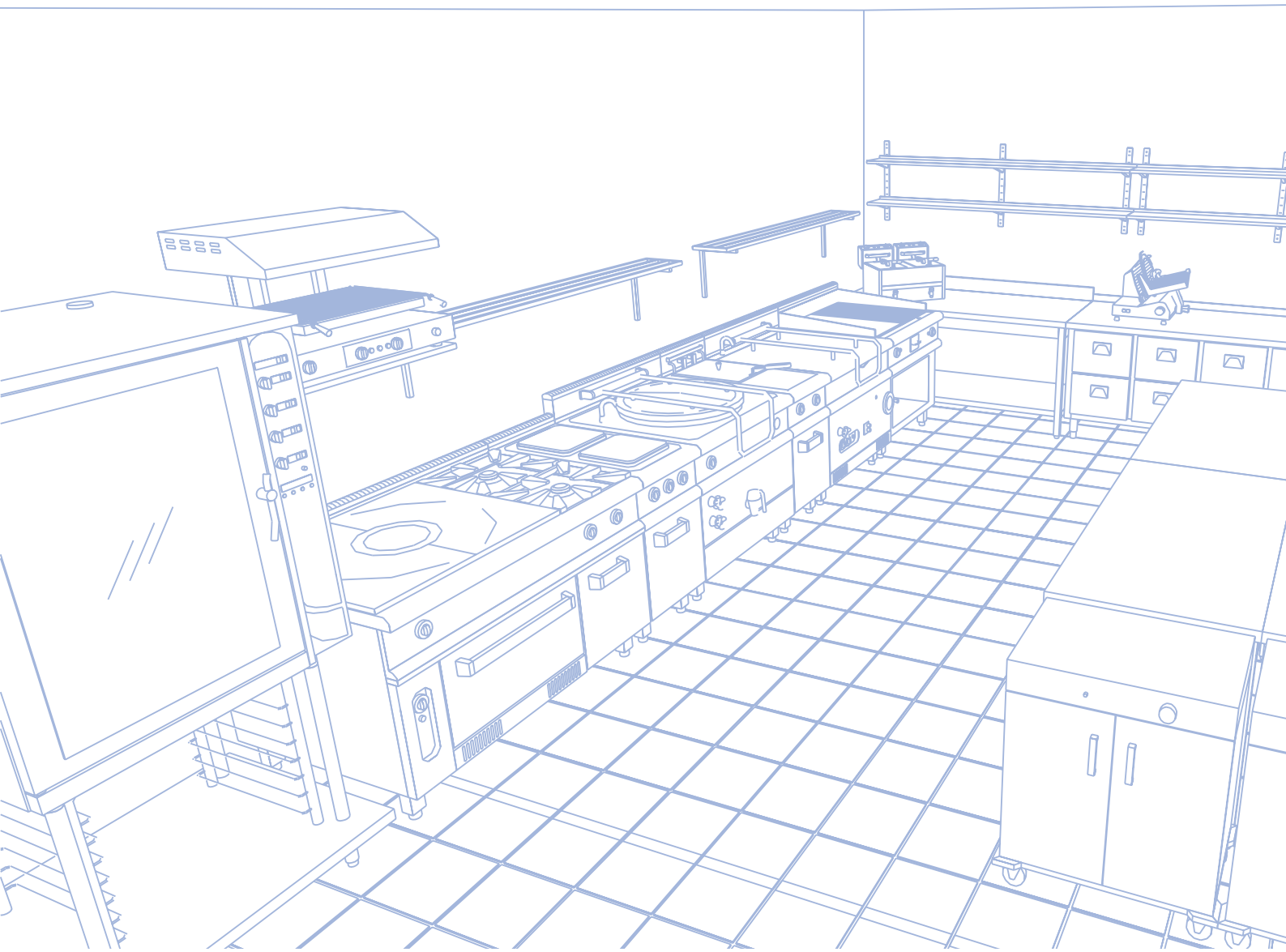

DIAMOND®

CATERING PROGRAM

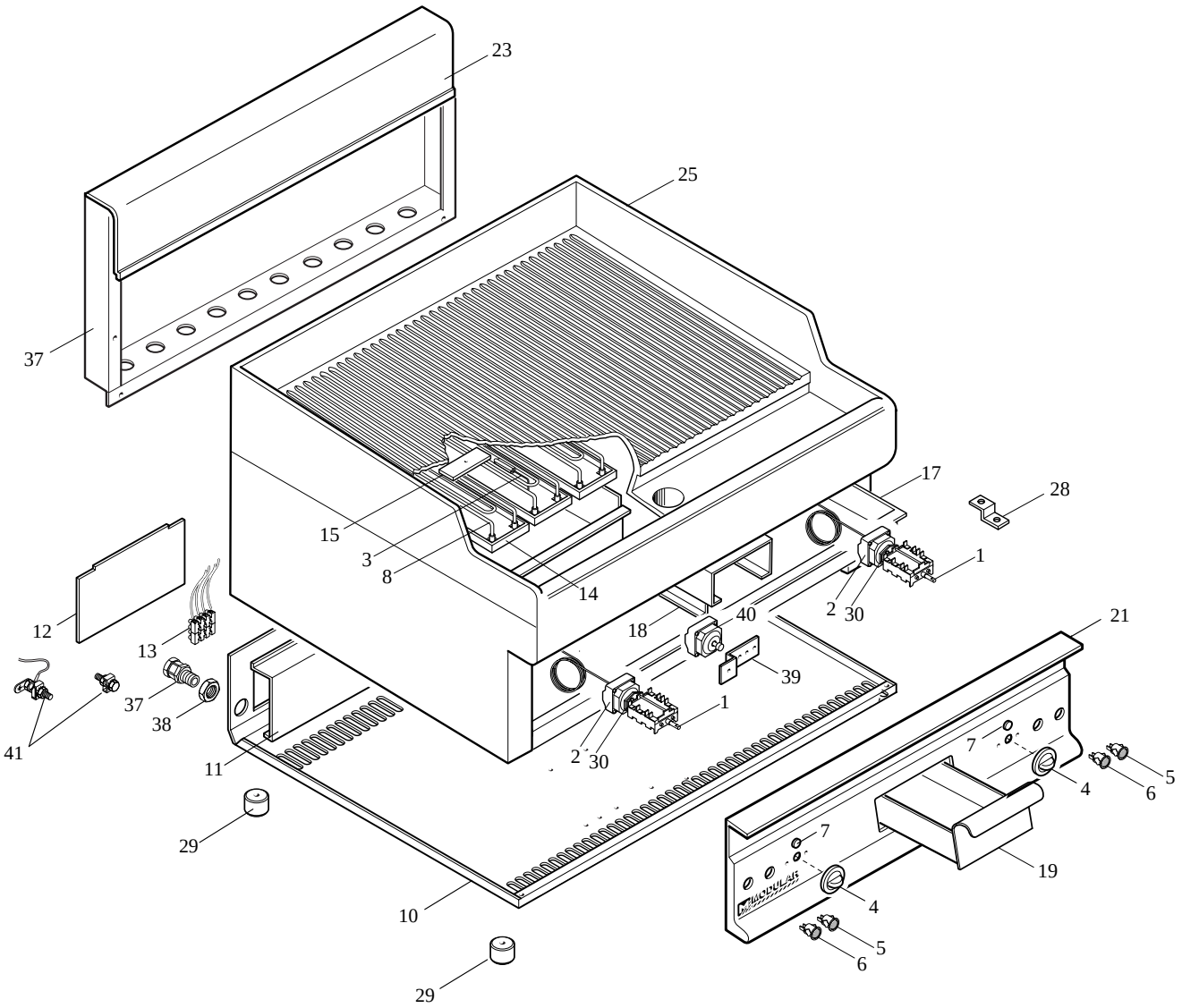
23
25
37
17
28
15
3
8
14
1
2
30
12
13
18
40
21
39
37
38
41
1
2
30
11
7
5
4
6
29
7
19
10
4
5
6
29

LISTA RICAMBI

cod. 253.019.00 A

FRY TOP ELETTRICO

ED. 01-99

E65/PLCD7T
E65/PMCD4T
E65PRCD7T

POS.	CODICE	RIF. MODIFICHE	DENOMINAZIONE	PREZZO
1	661.000.00		Commutatore ang. 15A-EGO 49.41015.300	
2	661.007.00		Termostato trif. 100÷350°C EGO 55.34062.803	
3	623.008.00		Fissaggio bulbo termostato	
4	612.003.00		Ass. manopola 50-300°C De 62	
5	663.001.00		Segnalatore arancio 41F2+dente	
6	663.000.00		Segnalatore verde 41F2+dente	
7	682.003.00		Placchetta indice	
8	665.002.00		Resistenza FTE 1500W 230V	
10	622.007.00		Fondo top da 70 elettrico	
11	623.007.00		Supporto morsettiera	
12	623.006.00		Coperchio per morsettiera	
13	663.005.00		Morsettiera PA 44 4poli	
14	622.001.00		Piastra fissaggio resistenze	
15	635.001.00		Rinforzo per piastra resistenze	
17	622.019.00		Protezione resistenze 65/70 FTE	
18	622.008.00		Supporto cassetto fry-top	
19	611.007.00		Ass. cassetto fry-top	
21	611.069.00		Ass. cruscotto FTE 70	
23	611.129.00		Ass. alzatina posteriore neutra FT70	
25	611.112.00		Ass. piano-piastra liscia-fianchi 70	
25	611.113.00		Ass. piano-piastra 1/2 liscia 1/2 rigata-fianchi 70	
25	611.828.00		Ass. piano-piastra rigata-fianchi 65/70 FTRR	
28	623.002.00		Squadretta fissaggio cruscotto	
29	651.001.00		Piedino D.30xH.20	
30	661.013.00		Staffa fissaggio termostato EGO 617078	
36	621.028.00		Schienale da 70	
37	663.027.00		Pressacavo PG 16-art. V.TEC 16	
38	663.023.00		Controdado PG 16 CN 14P	
39	623.212.00		Supporto termostato di sicurezza FTE	
40	661.045.00		Termostato di sic. +guaina 350°C-55.32562.802	
41	611.320.00		Montaggio viti di terra generale/equipotenziale	

LIST OF SPARE PARTS

code 253.019.00

ELECTRIC FRY TOPS

ED. 01-99

E65/PLCD7T
E65/PMCD7T
E65/PRCD7T

ITEM	CODE	MODIFICATION REF								DESCRIPTION	PRICE
1	661.000.00									15A-EGO 49.41015.300 ang. switch	
2	661.007.00									100-350°C EGO 55.34062.803 3-ph. thermostat	
3	623.008.00									Thermostat bulb fixing	
4	612.003.00									Knob assembly 50-300°C OD 62	
5	663.001.00									41F2 orange pilot light + tooth	
6	663.000.00									41F2 green pilot light + tooth	
7	682.003.00									Index plate	
8	665.002.00									FTE 1500W 230V heating element	
10	622.007.00									Size 70 electric top base	
11	623.007.00									Terminal board support	
12	623.006.00									Terminal board cover	
13	663.005.00									PA 44 4-pole terminal board	
14	622.001.00									Heating elements fixing plate	
15	635.001.00									Reinforcement for heating elements plate	
17	622.019.00									Heating elements protection 65/70 FTE	
18	622.008.00									Fry-top drawer support	
19	611.007.00									Fry-top drawer assembly	
21	611.069.00									FTE 70 control panel ass.	
23	611.129.00									Neutra rear upstand ass. FT70	
25	611.112.00									Top-plain griddle-sides ass. 70	
25	611.113.00									Top-1/2 plain/1/2 scored griddle-sides ass. 70	
25	611.828.00									Top-scored griddle-sides ass. 65/70 FTRR	
28	623.002.00									Control panel fixing bracket	
29	651.001.00									Piedino D.30xH.20 foot	
30	661.013.00									EGO 617078 thermostat fixing bracket	
36	621.028.00									Size 70 back panel	
37	663.027.00									PG 16-art. V.TEC 16 relief cable strain	
38	663.023.00									Check nut PG 16 CN 14P	
39	623.212.00									FTE safety thermostat support	
40	661.045.00									Safety thermostat+sheath 350°C-55.32562.802	
41	611.320.00									Assembly of main earth screws/equipotential	