04/2005

Mod: E65/4P7T

Production code: 65/70 PCE

Diamond
catering equipment

MODULAR

LIST OF SPARE PARTS
code 253.007.00

ELECTRIC HOB

MOD. 65/70 PCE

ED. 01-99

ITEM	CODE	MODIFICATION REF								DESCRIPTION	PRICE
1	621.026.00									Top side panel	
2	621.028.00									Size 70 back panel	
3	622.007.00									Size 70 electric top base	
4	651.001.00									D.30xH.20 foot	
5	611.015.00									PCE 70 top assembly	
6	611.006.00									Size 70 Neutra rear upstand ass.	
7	611.063.00									PCE 70 control panel ass.	
8	623.002.00									Control panel fixing bracket	
9	682.003.00									Index plate	
10	612.002.00									D. 62 7-postion electric knob ass.	
11	663.000.00									41F2 green pilot light + tooth	
12	663.036.00									FV173V-V 4-pole terminal board	
13	661.002.00									7- position switch for electric hotplates	
14	665.006.00									D.220-2600W-240V electric hotplate	
15	623.007.00									Terminal board support	
16	623.006.00									Terminal board cover	
17	622.010.00									PCE 70 electric hotplates fixing cross el.	
18	622.017.00									PCE 70 electric hotplate protection	
19	641.000.00									Electric hotplate fixing pin	
20	663.027.00									V-TEC 16-2022656 relief cable strain	
21	663.017.00									Check nut pg 16 116/16	
22	611.320.00									Assembly of earth screws+equipotential	

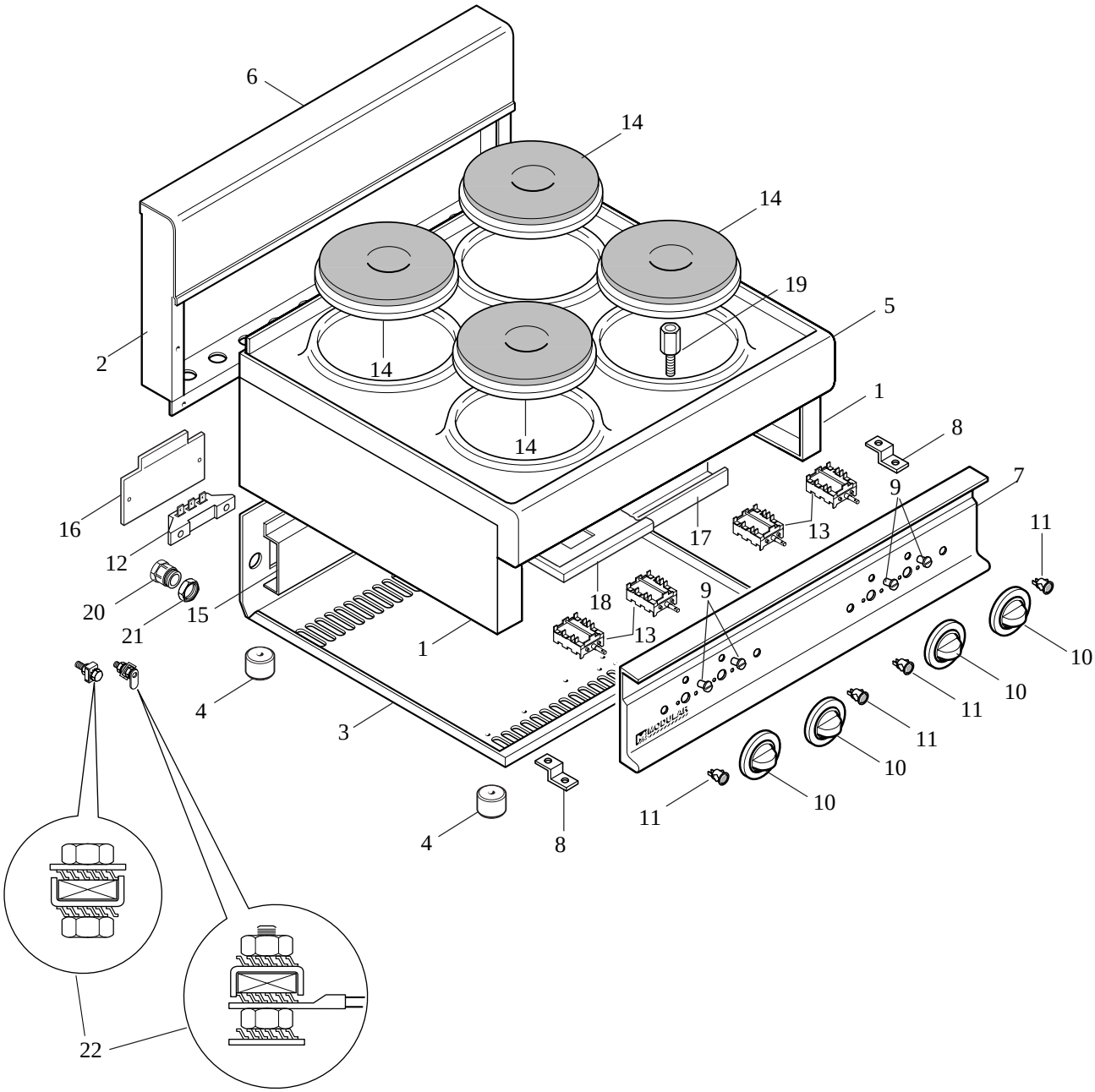
6
14
14
19
5
2
14
1
14
8
7
9
16
17
13
11
12
18
9
20
15
13
21
1
10
4
10
11
3
11
10
10
11
4
8
22